Ultra Low Noise Regulated DC filament supply amplifier Tubes

Input Voltage:	2.5 to 20 VDC, or 2.8 to 15 VAC.
Output Voltage:	1.25 to (VinDC – 0.5) VDC, up to 19.5 VDC.
Max. Output Current:	(9 / (VinDC – Vout)) Amp, up to 5 Amp.
Output Noise:	< 35uV RMS (10Hz to 100kHz).

Module Size:	90 x 48 x 52mm (W x L x H).
PCB Size:	90 x 48 mm.
Heat-sink Size:	42 x 25 x 50 mm.

For to use as a DC supply for tube filaments or heaters, it is a general-purpose DC supply that has many applications. Basically just add a transformer to get a regulated DC voltage in the 1.25V to ~25V range, at up to 5 amps. You can connect two modules to get a bipolar supply (for opamps, for example) - see below.

Output voltage and dual supply connection

The output voltage is set by the resistor divider (R1, R2, and R3) connected to the LT108x feedback pin, which is regulated at 1.25V below the output. For details, refer to the LT108x datasheet.

With the values shown in the schematic, the output can be adjusted from 2.5V up to 7.6V by adjusting the trimpot R1. If you wanted a range of 10V to 20V (for opamp supplies, for example), you could make R2 820 ohms and the trimpot R1 1k. You would also want to increase the bleeder resistor R4 to something bigger, like 1k.

If you have a transformer with dual secondaries, you can use two of these supplies to make a bipolar (+/-) supply. You would connect two modules as shown below:

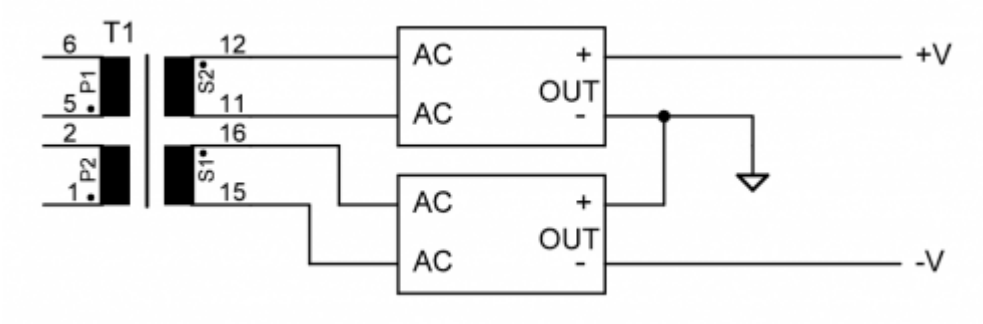

Input voltage and current

To maintain it's regulated output voltage, the DC voltage input to the regulator IC must remain slightly above the desired regulated output voltage (the minimum difference between input and output is referred to as "dropout voltage"). For the LT108x series, a 1.5V minimum difference is recommended. So, for a 5.0V regulated output, you should have 6.5V minimum at the input of the regulator (or output of the filter).

To determine what voltage the transformer secondary needs to be for proper operation, you need to consider this minimum voltage, the ripple voltage, and the voltage drop across the diodes. The peak DC voltage (top of the ripple waveform) is approximately [1.4 * (RMS transformer voltage)] - 1.0V, where the 1.0V is the drop across two diodes. The ripple voltage depends on the current output of the supply and the power supply capacitance (3 * 6800uF in the BOM, or 20.4mF). The ripple voltage is approximately I/(2*f*C), where f is 60 (60Hz mains) or 50 (50Hz mains). As an example, for a 1A load current and 60Hz mains, the ripple voltage would be about 0.4V.

If you add all this up: 6.5V (minimum input to regulator) + 1V (diode drop) + 0.4V (ripple) you get 7.9V. Now you multiply this by 0.707 to get the RMS voltage, which gives you 5.58V RMS. That is the *minimum* voltage you need for the transformer secondary. To keep the amount of power dissipated in the regulator as low as possible, you should use the next higher voltage available. In this case that would probably be a 6V transformer.

The RMS current rating of the transformer should be a minimum of 1.8x the DC output current. This is a general rule of thumb, and it does depend on the transformer itself. So for the 5V 1A output example above, ideally you'd want a 6.3V 1.8A transformer. Higher current ratings are good (2A would be a good choice here - the higher the current rating the cooler the transformer will run).

Example of connection with triode 300B

Connection with the AB-D module

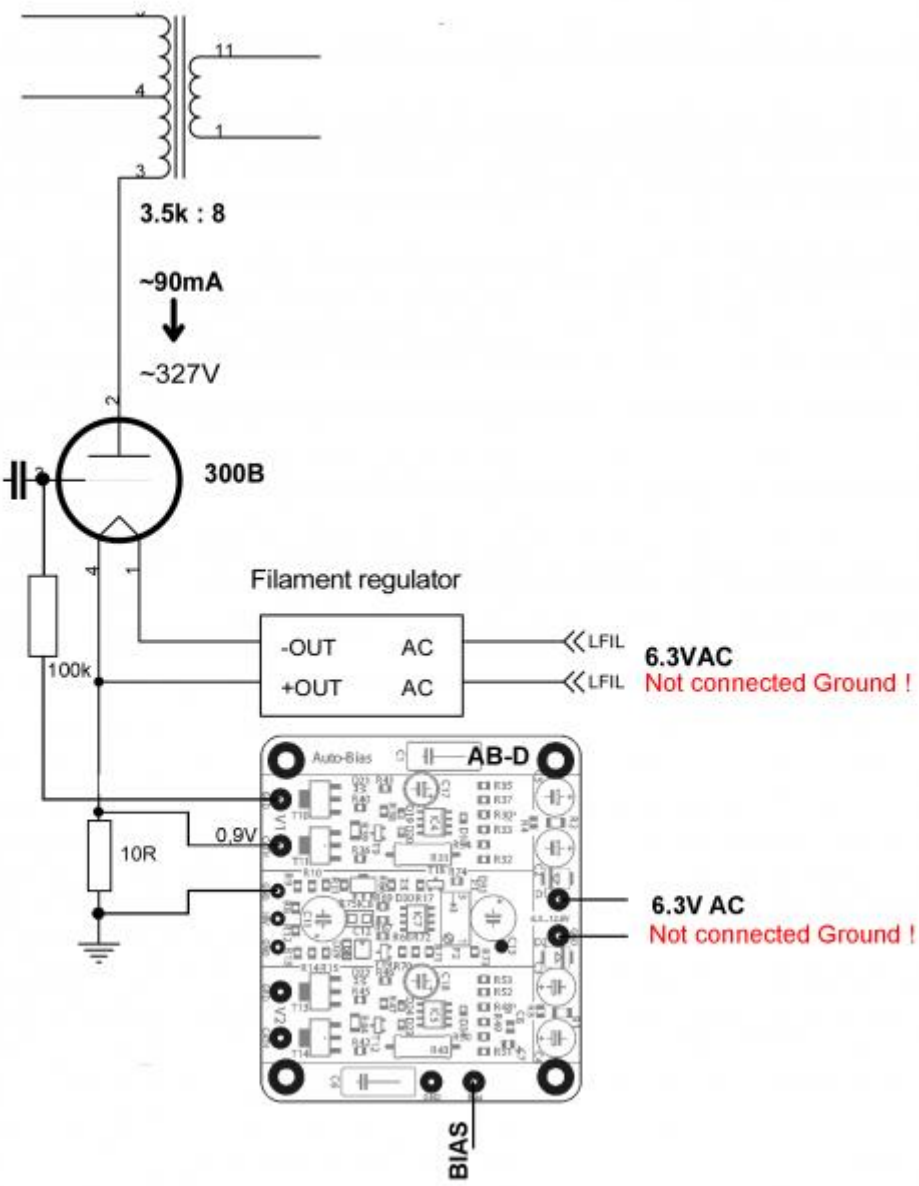
11
4
1
3
3.5k : 8
~90mA
~327V
2
300B
4
1
Filament regulator
-OUT
AC
+OUT
AC
LFIL
LFIL
6.3VAC
Not connected Ground !
100k
Auto-Bias
AB-D
V1
0,9V
10R
6.3V AC
Not connected Ground !
V2
BIAS